TYRE CHANGER

USER MANUAL

Pls read this manual before operation

TC12EN

☞Main operation parts indicated in Fig 1

1. Main switch（Fig 4）
2. Lift arm
3. Hydraulic clamp
4. Tire support platform
5. Operation control switch
6. Clamp control switch
7. Tire rotation control（clockwise/counter clockwise）
8. Trailer
9. Tool rack
10. Tool rack lock rod
11. shock-absorber
12. Round bead breaker disk
13. Nose tool
14. Positioning handle controlling the nose tool and round bead breaker disk

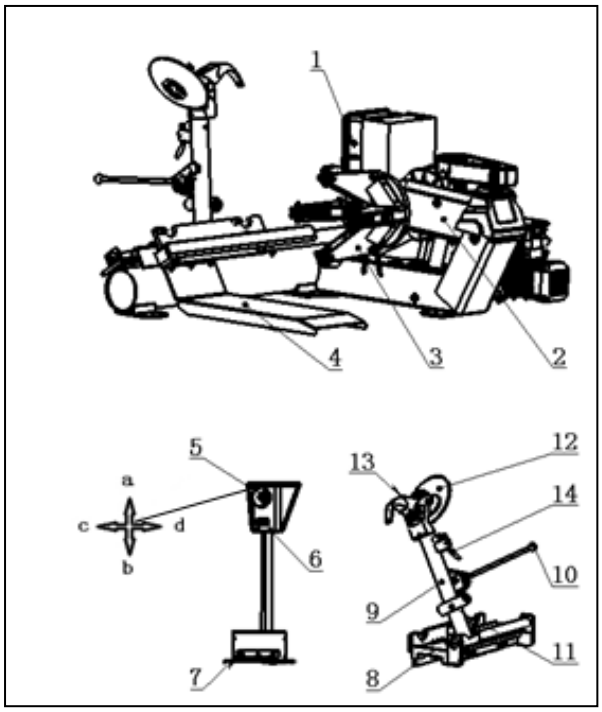

Fig1

☞**Technical parameter**

Rim suitable	14'-26"
Max. wheel weight	1000Kg
Max. wheel breadth	1000 ㎜
Max. wheel diameter	1500 ㎜
Pump motor	1.5KW-380V-3phase
Gearbox motor	1.8KW-380V-3phase
Operation pressure	130 bar -150bar
Noise	<75db
Net weight	561Kg

☞**Installation**

Installation site：Choose the safety location in accordance with the related safety regulation. The tire changer should be connected with the electrical network and you should choose a location suitable to connect with the electrical circuit. The installation space should be convenient for the operator to operate（Fig 2 indicates the dimension）. If installed outdoors, it should equip the machine with the rain protective shed.

●

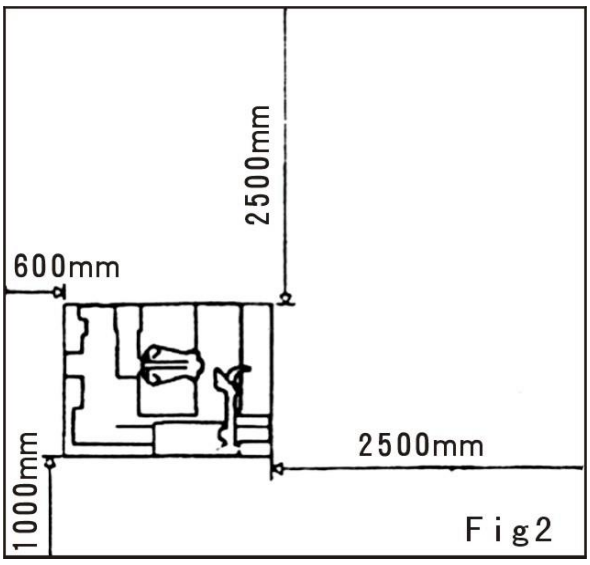

Fig2

！It is forbidden to use the machine in the open field.

Installation foundation as shown in Fig 3. The floor should be flat. The machine chassis should be fixed by the bolt through a fixing hole. When the gradient relative to the horizontal plane is larger than 2.5‰, it should be lever up to achieve compensation.

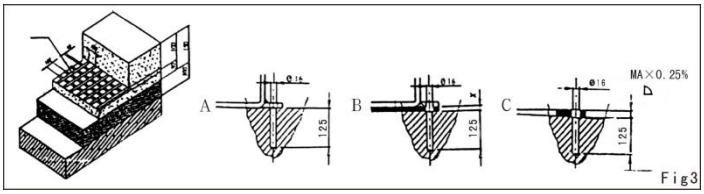

● Electrical connection；

Note：

◆ The installation site should be equipped with the effective protective ground loop and connect in accordance with the ground marks of the machine.

◆ The power system should be equipped with the automatic circuit breaker, setting at ３０Ａ.

◆ Connect the tire changer with the electrical supply and close the switch. Check if the running direction of the motor is the same to the direction of the arrow（Fig５）. If the direction is reverse, it needs the professional personnel to change the phase.

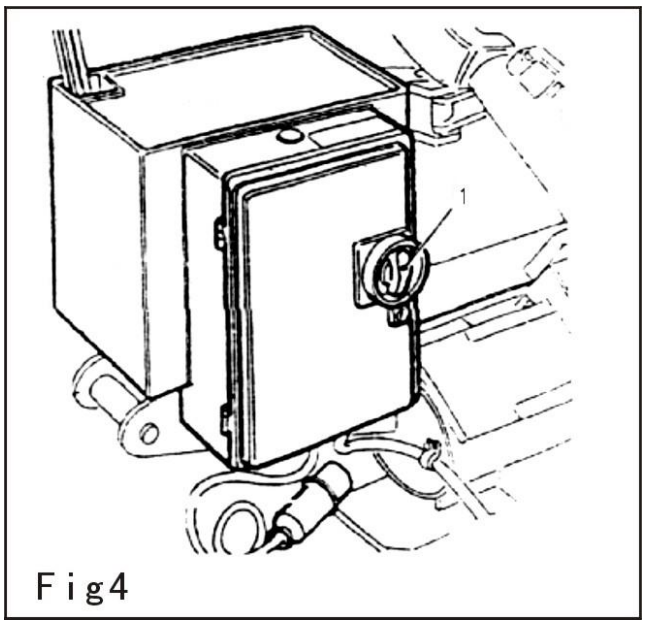

Ｆｉｇ4

！ If the generator exists reserve for seconds, it will be burned.

！ All the work must with the tool rack' s condition set to be "non-operation"（９）

！ uld be executed by the professional technicians.

Note：The main shaft motor and hydraulic pump more all have the overload protection device installed in the Fig 4.

◆ Running test

Before use the tire changer, it must performs test run. To test if the installation is correct and the running is normal.

◆When perform the test run；position the tool rack（９）at the non-operation position. Pull the tool rack lock rod（１０） to unlock the tool rack（９）. Pull out and set at the non-operation position.

◆Connect the main switch of the electrical cabinet（１）and start the hydraulic motor. Step down the pedal switch（７）：When step the left side pedal, the hydraulic clamp will rotate counterclockwise and if step the right side pedal, the hydraulic clamp will rotate clockwise.

！If weight of the tire to be demounted exceeds 1000kg, the machine must be fixed via the anchor bolts.

◆ Operate control switch（5）: Push along the directions of a and b，the vertical arm（2）will descend or ascend. If push along the directions of c and d，bracket will move leftward or rightward. Push the clamp control switch（6）rightwards, the hydraulic clamp will open automatically. And if push the clamp control switch（6）leftwards, the hydraulic clamp will close automatically.

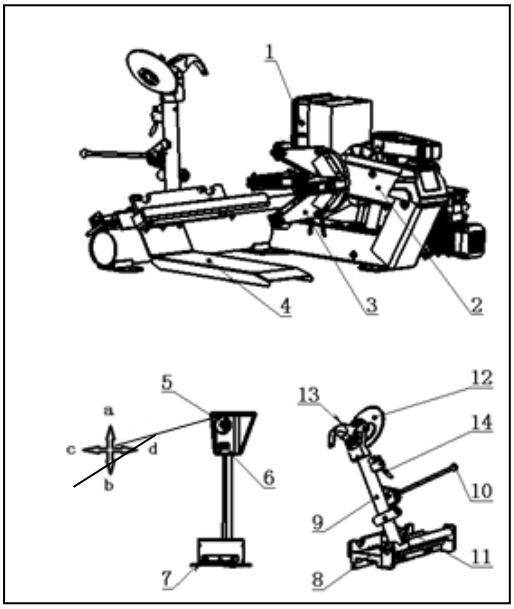

Fig6

！When the lifting arm vertically move or the hydraulic clamp opens, it may cause the damage. So you should always work outside of its range of motion.

☞Use

●Use instruction

！Ignoring the instruction and warning may cause the damage to the operator and the third party, therefore you should not start the machine before you read the manual.

All the operators must be properly trained before use the machine and the other personnel is not allowed to enter the work location. Do not place the objects on the tire changers to prevent the dangerous when operation. Without the permission of the manufacture， you should not modify or change the tire changer. You should pay attention to safety when work. You should not wear long hair, loose garment, necklace, bracelet , ring and watch. All these objects are easy to be hooked.

◆ **Emergency stop: switch the main switch to 0 or cut off the electrical supply.**

● **Rim clamping**

This machine is adapt to the 14"—26" rim with the center hole the min. diameter of 120㎜ to 700㎜. The type of the rim is different, the clamp method and position is different. See Fig7.

Position the tire vertically on the tire bracket. Push the control handle to lift up the tire slightly and push rightward the clamp control switch to clamp the tire and rim tightly and move them to the height of the operation.

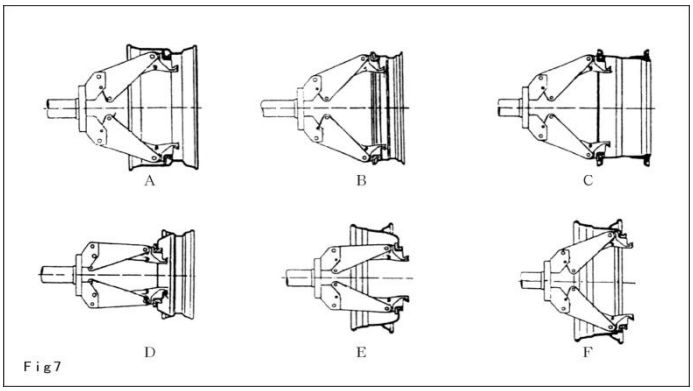

Fig7

◆Demount the tubeless tire

Use the circular disk to complete the bead breaking.

1. Secure the tire is fixed and deflated.
2. When work, adjust the tool rack（9）. Use the corresponding tool and use the tool rack lock rod （10）to hook the bracket.

！You should always check if the tool rack lock rod correctly hook the trailer(8）

3. Use the control switch (5）to make the circular

bead breaker disk（12）firmly lean against the edge of the rim as shown in Fig8.

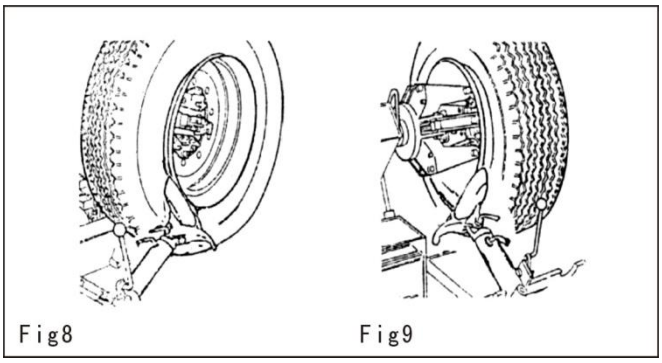

4. Turn the tire and meanwhile move the circular bead breaker disk（12）forward.

5. Continually move forward until the edge of the tire is detached. To make the operation convenient, you should spread the grease on the edge of the tire avoiding the damage to the tire and rim.

！Be careful！Do not grip the finger between the tire and the tool to prevent from any possible danger. When operate the external rim, rotate clockwise and when internal rim, rotate counterclockwise.

6. Move the circular bead breaker disk（12） from the rim of the wheel. Release the tool rack lock rod（１０）. Lift the support arm to the non-operation position. Shift the circular bead breaker disk（12） to the inside.

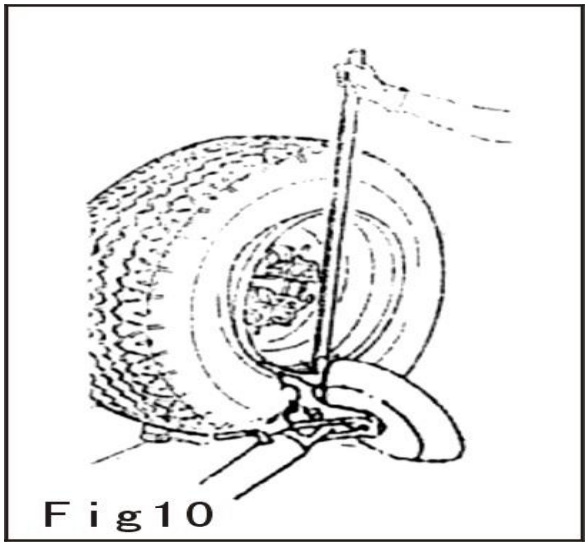

！To the heavy of oversized tire, you should use the proper lifting device to prevent the injury and damage to the human body.

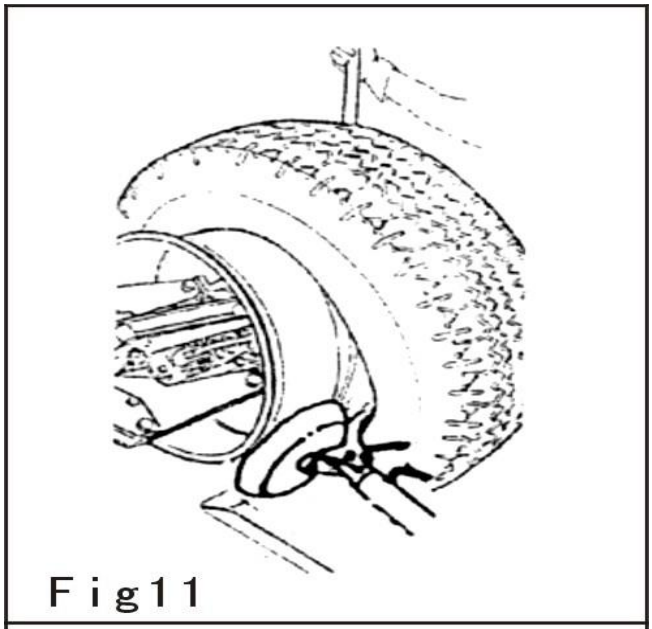

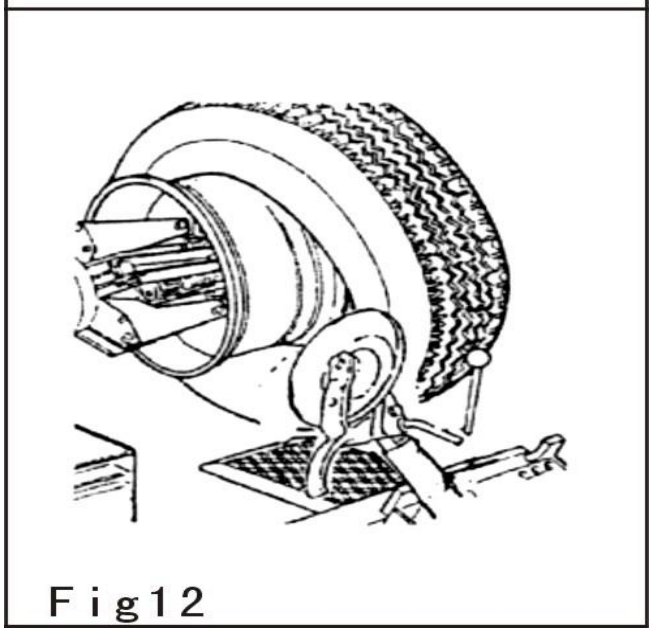

7.Repeat the above operation until the edge of the tire at the other side is come off as indicated in Fig ９.

● Demount tire：

1） Push the tool rack（９）to the non-operation position outside of the wheel. Secure the nose tool point to the tire or detach the positioning handle（１４）. Rotate the tool head by １８０°and then lower down it to hook the bracket.

2） Control operation switch and adjust the

position of the nose tool（１３）to the tire. Move it in between the tire and rim and insert into the edge of the tire to hook the tire.

3） Move down the bottom edge of the wheel to prevent the edge of tire separate from the nose tool.

4） Move outwards the nose tool till reaching the external rim of the rim.

5） Under the nose tool, insert the crowbar in between the rim and tire.

6） Press downwards the crowbar and lower the wheel until the distance from the rim of the wheel to the nose tool is ５㎜（as Fig１０）.

7） Rotate the wheel counter clockwise till the edge of the tire completely come off from the rim（as Fig11）.

8） Move the tool bracket to the inside of the tire and lean the circular bead breaking disk firmly against the edge of the tire. Counter clockwise rotate the wheel making the internal edge of the tire completely come off the wheel and the whole tire is detached.（as Fig１２）

Mount the tire：

1） Secure the rim is firmly clamped by the hydraulic clamp.

2） Spread the grease on the rim and side wall of the tire.

3） Clamp the pliers at the highest position outside of the rim of the wheel（as Fig １3）

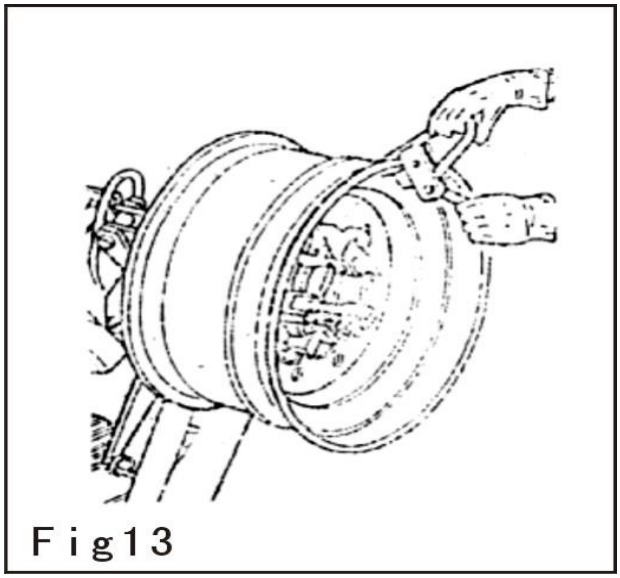

Fig13

！ If the tire is heavy duty or extra-large, you should equip the suitable lifting device for fear the injury to the human body

4)Place the tire on the bracket. Lower down the lifting arm to adjust the position of the tire bracket to the lifting arm. Hook the inside of the tire on the rim clamped with the pliers. Secure the pliers at the highest position of the rim.

5) Lift up the rim and tire and clockwise rotate by 15—20mm. The rim and tire lean against each other crossly.

6)Check if the nose tool towards one side of the tire. If not, detach the positioning rod and rotate by 180°and fix.

7）Use the control switch to align the nose tool with the external rim of the wheel at the distance of 5mm.

8)Clockwise rotate until the pliers at the lowest position.

9)Detach the pliers from the rim of the wheel and remove the tool from the tire.

10)Move the tool rack to the external of the tire and fix.

11）Clamp the pliers at the external of the rim and rotate the nose tool to the upper of the nose tool.

12）Counter clockwise rotate the tire till the pliers at the lowest position and mount the external edge of the tire.

13）Remove the pliers.

14）Position the tire bracket under the wheel and lower the hydraulic clamp bracket to place the wheel on it.

15）Open the hydraulic clamp and remove the tire carefully. In this process, you should prevent the

tire from rolling down. Pay attention to the safety.

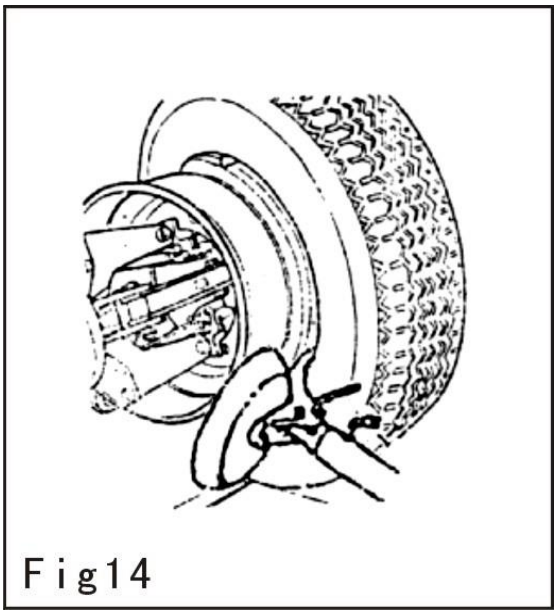

Fig14

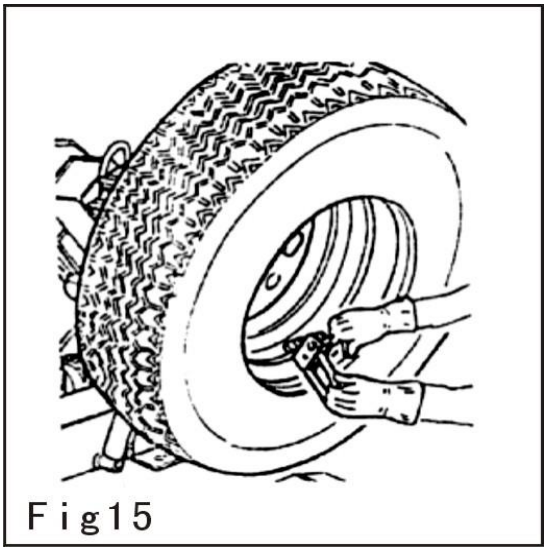

Fig15

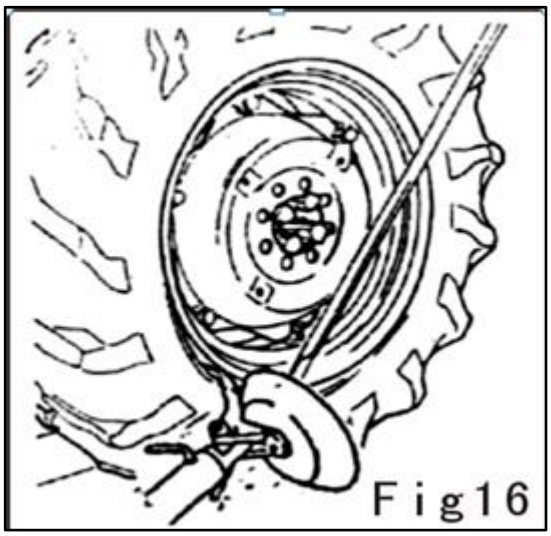

Fig16

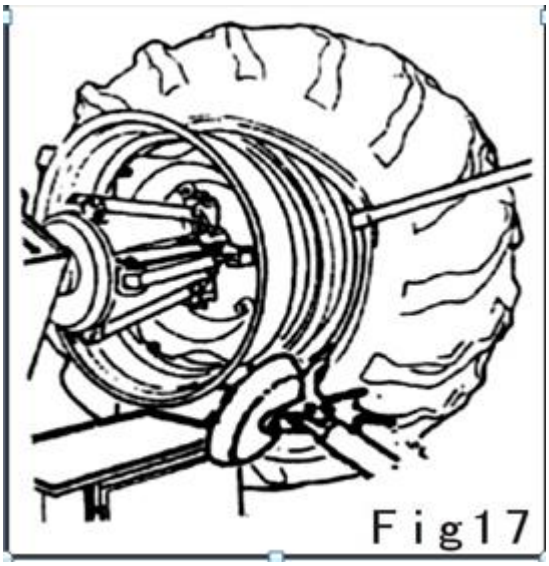

Fig17

Be carefully! When operate, do not place your finger in between the tire and tool to prevent the danger.

● **Demount the tire with tube**

! When deflate the tire, unscrew the bushing fixing the valve to make the valve fall into the inside of the edge of the wheel to prevent the block to the bead breaking.

Continue the above steps. To the tire with tube, you should stop the movement of the disk when the bead is breaking to prevent the damage to the core.

1) Push the tool rack ⑨ to the non-operation position outside of the wheel. And at this position, hook the tire.

2) Rotate the shaft and move the nose tool inserting in between the rim and tire till the tire is hooked.

3) Move the rim of the wheel down by 4—5cm to prevent the rim of the wheel being detached from the tool.

4) Move outwards the nose tool till to the rim of the wheel.

5) Under the right of the tool, insert the crowbar in between the rim and tire.

6) Press down the crowbar and lower the wheel

until the distance from the rim of the wheel to the nose tool is 5mm.

7) Counterclockwise rotate the wheel until the edge of one side of the tire come off completely.

8) Move the tool rack to the non-operation position and lower down the tire making it contact with the tire support platform④. Move the tire support platform outwards slightly for leaving the space to take out the tube.

9) Take out the tube and once more lift tire.

10) Move the tool rack to the inside of the tire. Rotate the nose tool by 180°and lower the support arm to the work position and inset in between the rim and tire. And then rotate the wheel.

11) Move the rim by 4—5cm to prevent the rim coming off from the tool.

12) Move the node tool making it at the position of 3cm inside the tire.

13) On the right side of the nose tool, plug the rod in between the rim and the edge of the wheel.（Fig 17）

14) Press down the crowbar and lower the wheel until the distance from the rim of the wheel to the nose tool is 5mm. Counterclockwise rotate the wheel until the edge of one side of the tire come off completely.

! When the tire detached from the rim, the wheel will fall down. So you need secure there are no unauthorized personnel at the work location.

Mount the tire：

1） If the edge of the wheel has been detached from the hydraulic clamp, lock as per the instruction in the section of clamp the rim.

2） Spread the grease on the rim of the tire and rim.

3） Clamp the pliers at the top position of the external edge of the rim.(Fig18）

Secure the pliers is firmly fixed to the rim of the wheel.

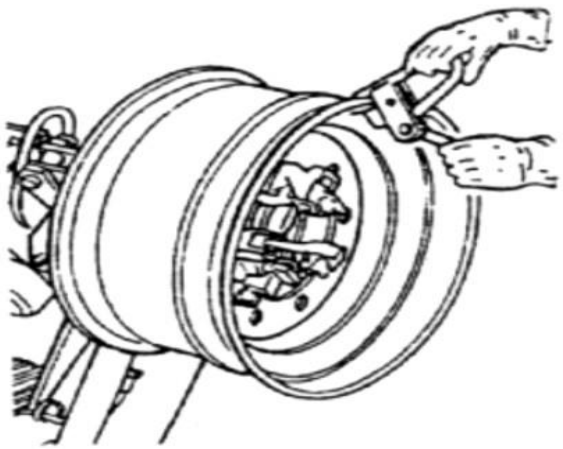

Fig18

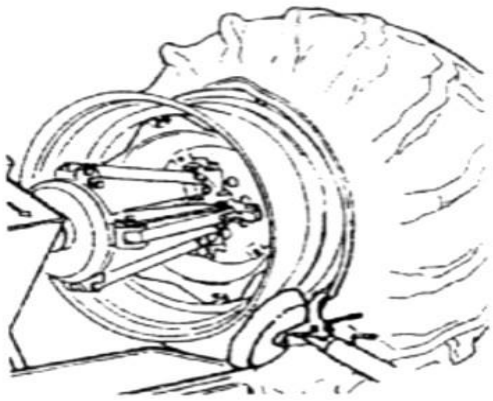

Fig19

4） Lower the lifting arm and place the tire on the tire support platform.

5） Hold the pliers at the highest position to hook the inside rim of the tire.

6） Lift the rim with the tire and counterclockwise rotate by 15—20cm and the tire will tilt automatically.

7） Move the tool support arm to the non-operation position and move it to the inside of the tire and hook again

8） Secure the nose tool at one side of the wheel.

9） If not, rotate by 180°.

10） Move forward the nose tool to align it with the external rim of the rim and keep the distance of 5mm.

11） From the position of the wheel, visual check if the position is correct. If it is wrong, you should adjust. And then counterclockwise rotate the hydraulic clamp till the pliers at the lowest position and the inside of the tire is mounted Remove the pliers（Fig 19） Take off the tool from the tire.

12） Move the tool supporting arm to the non-operation position and move to the outside of the tire.

13） Rotate the parts by 180°.

14） Rotate the main shaft to make the valve hole under the rim. Place the tire support platform （4）under the wheel and lower the lifting arm to make the tire contact the tire support platform. Move the tire support platform outwards slightly to leave the space to insert the tube.

Note：Maybe the valve hole not aligned to the center of the rim. In this case, mount the tube as per Fig20. Insert the core into the hole and use the locknut to lock.

15） Mount the tube into the groove of the rim. Note: For convenient operation, we suggest to rotate the main shaft at the same time.

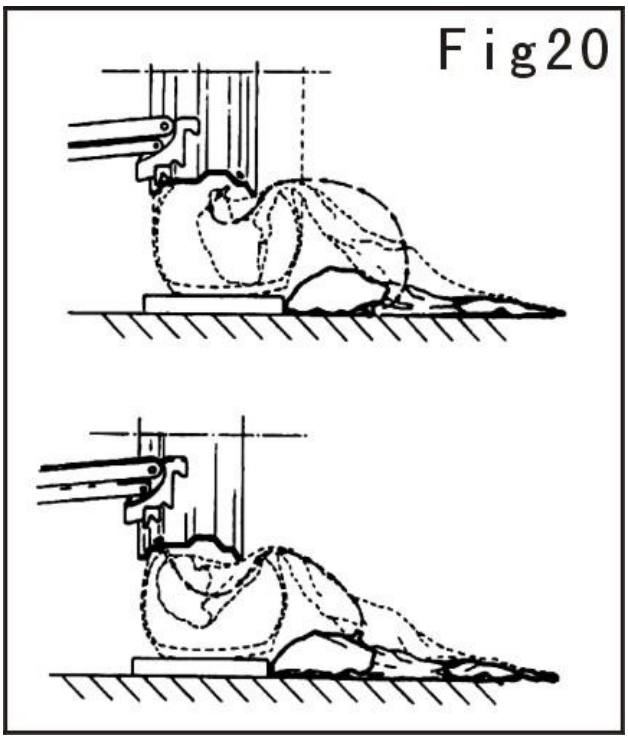

16）Inflate the small amount of air into the tube till without too much folders to guarantee the other side of the tire will not be damaged for the press.

17）Install the extension pipe on the valve and take out the lock ring. Note：The operation purpose of this operation is to loose valve to prevent the come off of one side.

18）Lift the tire and clamp the pliers at the other side at the 20cm right to the valve.

19）Clockwise rotate the main shaft till the pliers at the position of 9 O'clock.

20）Move the tool rack to the operation position.

21）Move the nose tool to the position 5mm from the external rim of the wheel.

22）Clockwise rotate the main shaft till the tire completely mounted on the rim of the wheel.

23）Take off the pliers and counter clockwise rotate to take off the tool and move outwards.

24）Move the tool rack to the non-operation position.

25）Place the tire support platform under the tire and lower the lifting arm until the tire contact the tire support platform.

26）Lean the wheel against the tire support platform. Check is the valve is align to the intake hole right. If not, slightly rotate the main shaft to adjust the position. Use the lock ring nut to fix and take off the extension pipe.

27）Carefully release the hydraulic clamp and hold on the wheel for fear of falling down.

28）Move the tire support platform to release the tire from the clamp and take off the tire again.

●**Demount the tire with bead press ring**

1）As per the above description, clamp the tire and secure it has been deflated.

2）Lower the took rack to the work position and use the tool rack lock rod to lock.

3）Press circular disk into the flange (as Fig 21)

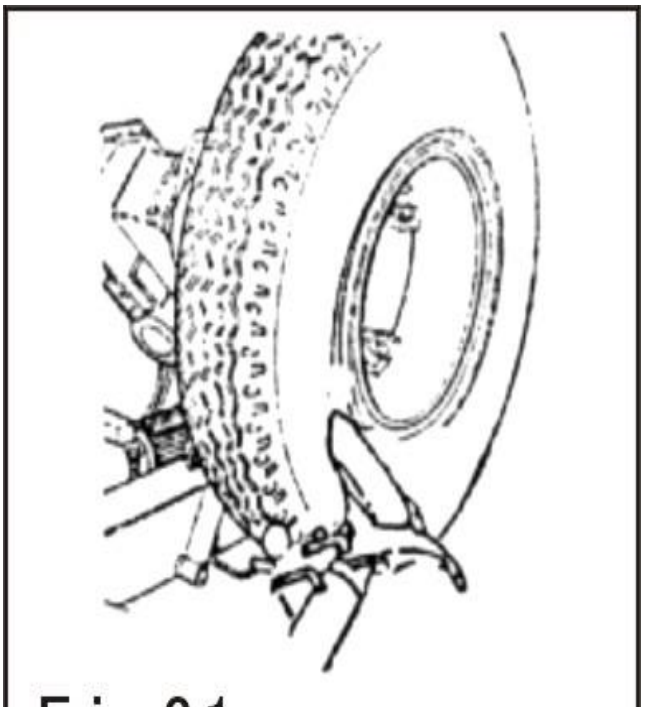

Fig21

！The unauthorized personnel is not allowed to maintenance and repair.

If there is tube, carefully! Once the edge of the rim is torn, stop immediately to avoid the damage to the core and the tube.

4）Rotate the main shaft and move the disk forward gradually until the bead press ring completely detached from the rim. Please note that the grease must be applied.

5) As shown in Fig 22, use the crowbar to move the open of the bead press ring on the edge of the rim and then use the disk to press from inside and rotate the main shaft counterclockwise.

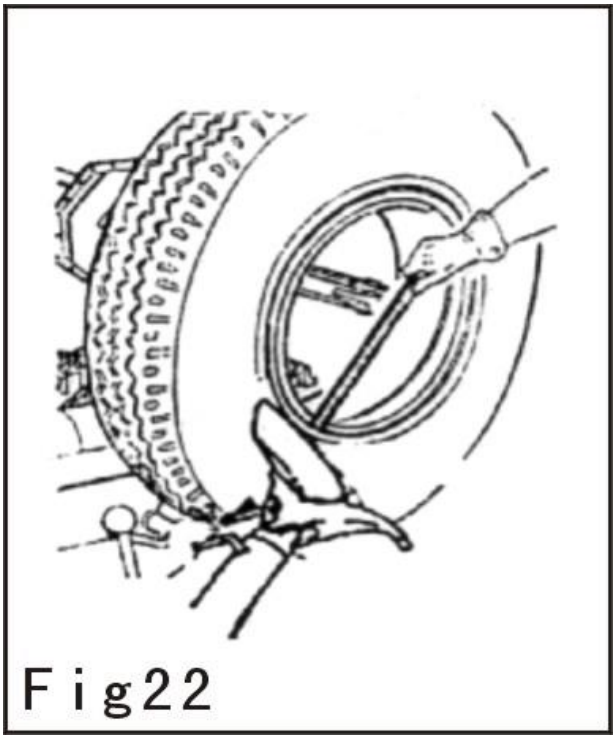

Fig22

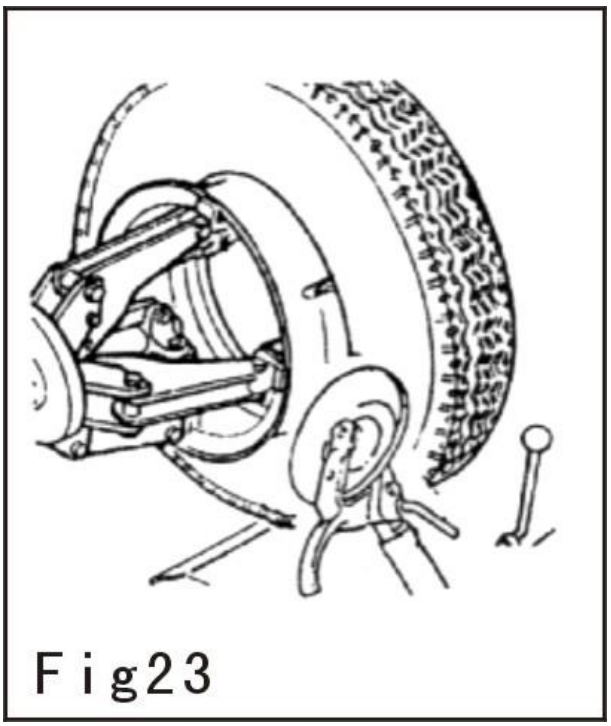

Fig23

6) Insert the core into the rim for feat that it will be tore when demounts the tube. Move the tool rack （9）to the non-operation position and move the tool rack to the outside of the wheel.

7）Lower the support arm to the non-operation arm.

8）Close the disk towards the tire until half of the tire comes off.

9）Move the tool rack to the non-operation position.

10）Lower the lifting arm until the wheel placed on the wheel support platform making the tire completely come off from the rim. Care about the core.

Mount tire

1） Fix the rim and position the core on the rim at the bottom and spread the grease.

2） Move the tire support platform outwards and place the tire on it and position the core on the rim at the bottom.

3） Move the tire support platform until the rim completely into the tire.

4） Move the tool rack to the outside and disk towards the wheel and lean against the rim. Rotate the main shaft and meanwhile forward the disk making the whole rim into the tire.

Place the open ring on the edge of the wheel and install the ring with the help of the bead breaking disk（Fig 24）

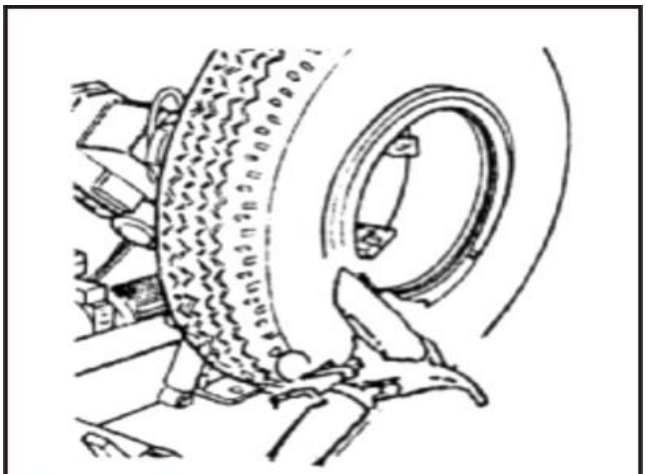

Fig24

5） Move the tool rack to the non-operation position and release the clamp. Move the tire support platform and remove the wheel safely.

☞Maintenance and Repair

Periodically repair and maintain as per the instruction manual is the basis to use the tire changer correctly. It can prolong the work life of the machine and guarantee the reliability of the running of the machine. To secure the safety, before repair and maintenance, you should pull out the power plug and use the original parts. It should use the professional personal to change the parts with problems. Use diesel oil to clean the following parts and fill the lubrication oil. ① bracket guide rail ② tool rack horizontal shaft ③ lift oil tank. The connect shaft of the dual tool should be added with grease in summer and gear oil in winter periodically.

The hydraulic system uses the HV 32# hydraulic oil.Please replace the hydraulic oil after new machine running 200-300 hours or the solenoid valve with hard. After the first replacement, when grand total using time about 800 hours, give another replacement. Use oil lever to check the hydraulic oil in the hydraulic oil tank and its quality（Fig 25）. If the oil is not enough, please add 32# hydraulic oil. if the oil becomes black or goes bad, replace the hydraulic oil.

The gearbox uses the 320# gear oil. Please replace the hydraulic oil after new machine running 200-300 hours. After the first replacement, when grand total using time about 1000 hours, give another replacement. Periodically(one time per quarter) add the 320# gear oil to the gearbox. The oil level should be

higher than half of the oil window.

Check the tension of the motor belt. If need adjustment, remove the plastic cover and use the adjustable screw to adjust the belt.

Storage：You should store properly if long time no use（3~4 months）；①Descend the lifting arm ② Make the lifting arm without loading ③Take out the electrical supply ④ Spread the grease on the bracket guide rail ⑤ Empty the oil tank ⑥Spread the grease on the tool rack horizontal shaft.

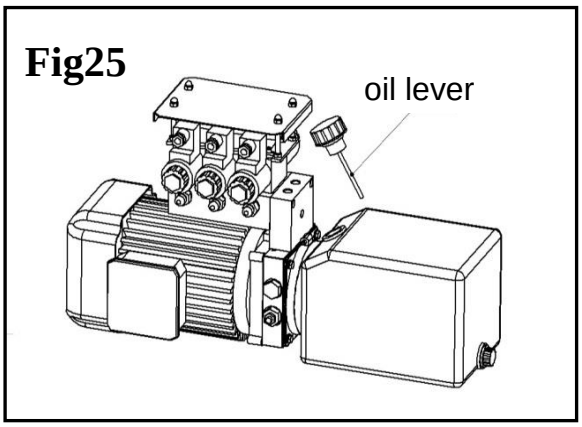

Fig25

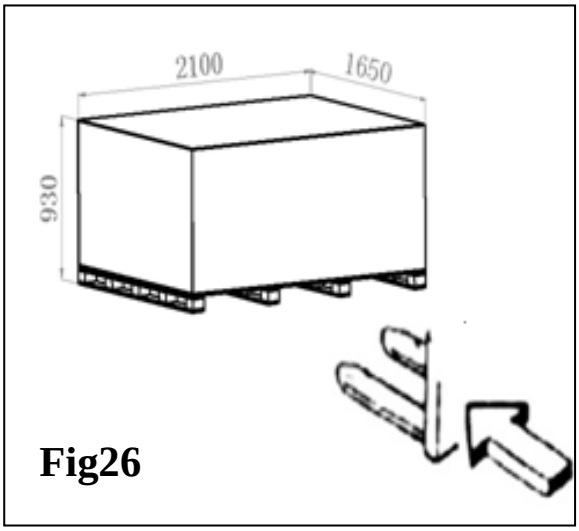

Fig26

☞Transportation, package and storage

The machine must be transported in the original package and place as per the location indicated on the packing box. The forklift can meet the capacity to carry the machine. The position of the fork is as indicated in the Fig 26. Open up the packing box and then you should secure the tire changer is intact in the process of transportation. Take out the standard accessory and the package material should be treated properly. The storage condition should be：max. RH is 95% and the temperature range is -5ºC to +40ºC。

☞**hydraulic scheme**

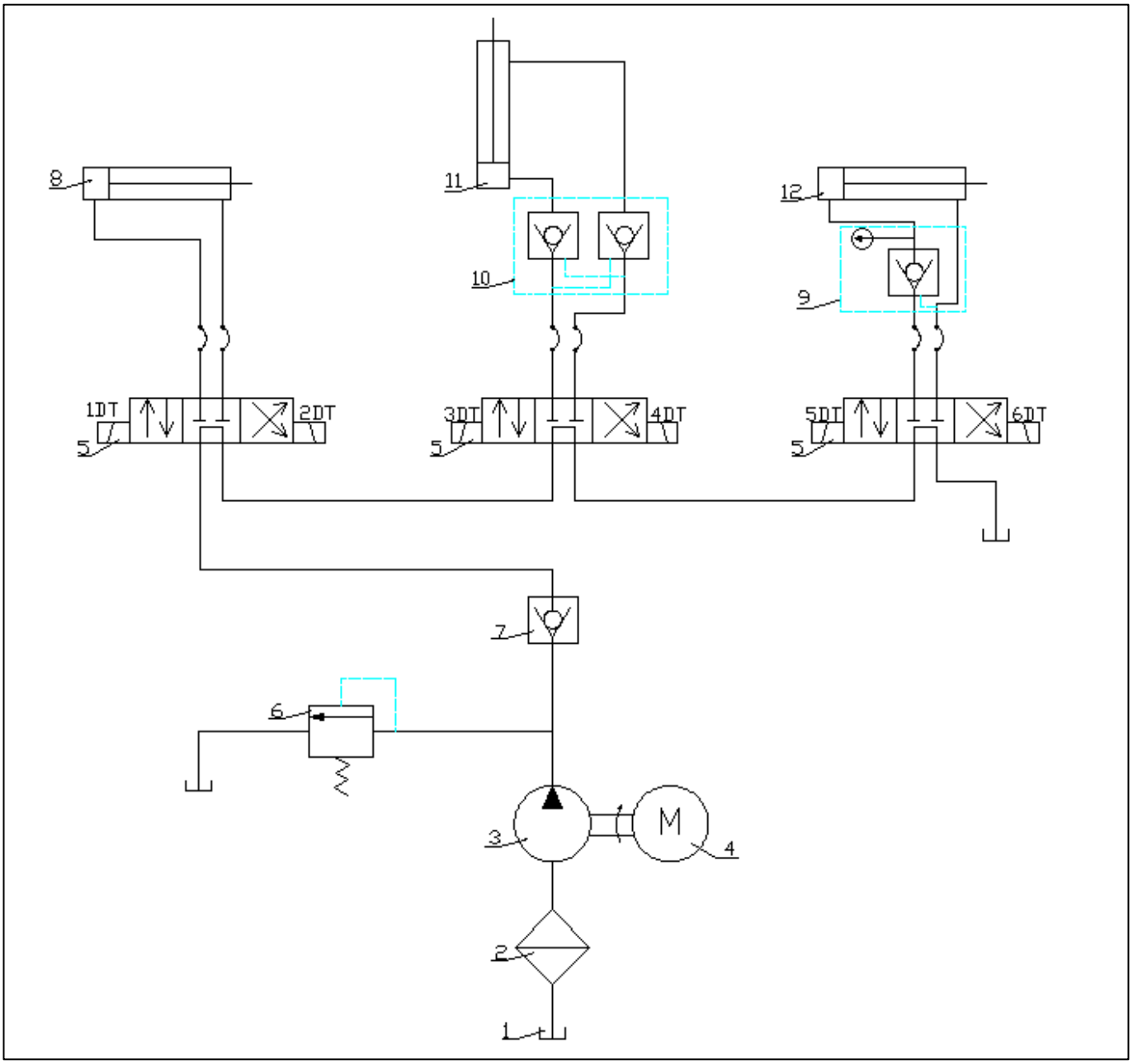

1.oil tank 2.filter 3.oil pump 4.motor 5.solenoid valve 6.overflow valve 7.one way valve
8.trailer oil tank 9.oil guide 10.hydraulic lock 11 vertical movement oil tank 12 main shaft oil tank

Technical parameter

1. Motor：1.5KW/380V/220V；1400r/m in ；3-phase
2. oil pump: output;3.1ML/r; rated work pressure15MPa
3. control voltage:DC24V。
4. The motor oil pump is designed to be separated from the valve plate

☞LC588 Electrical scheme

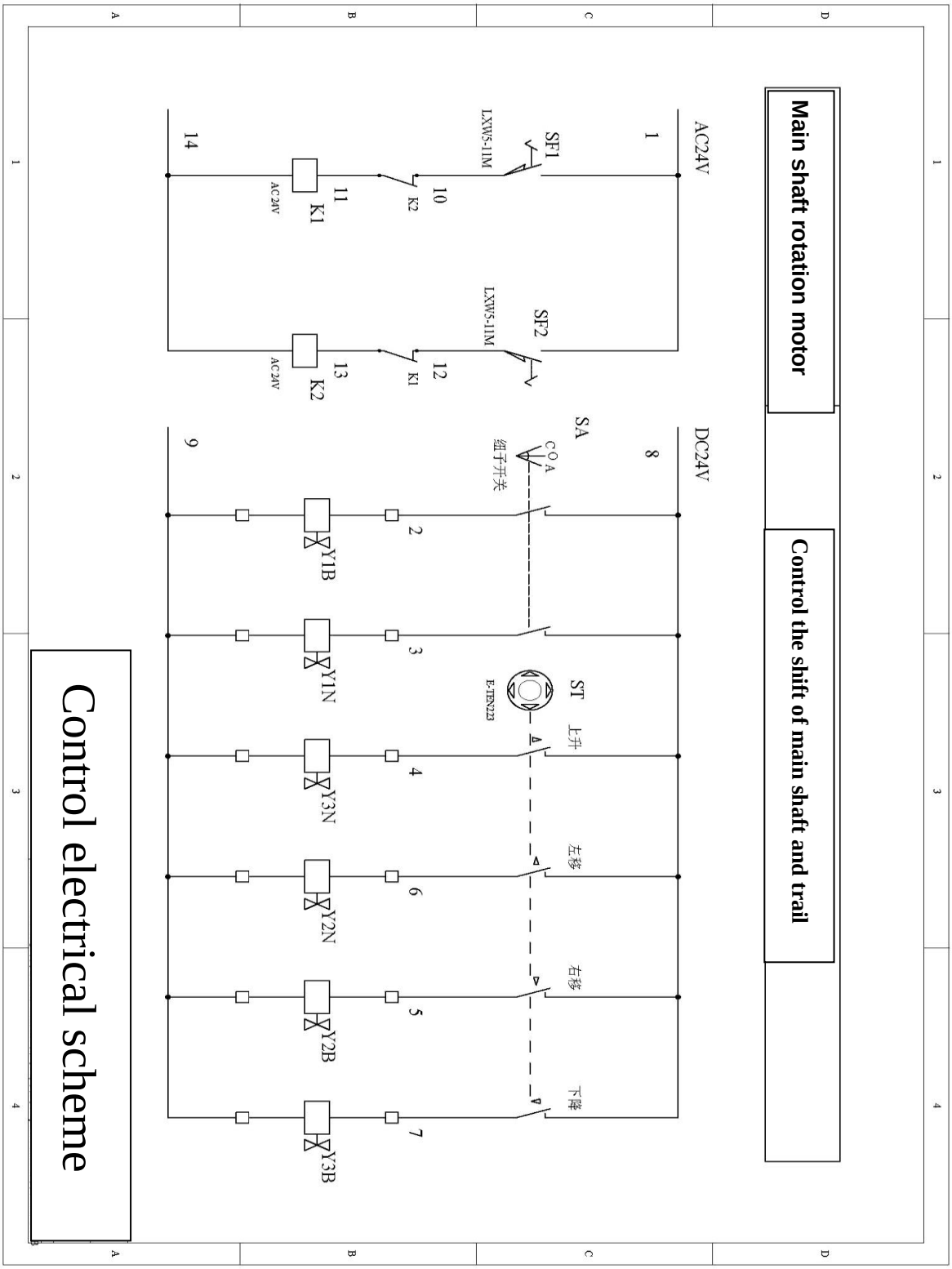

☞Voltage conversion scheme

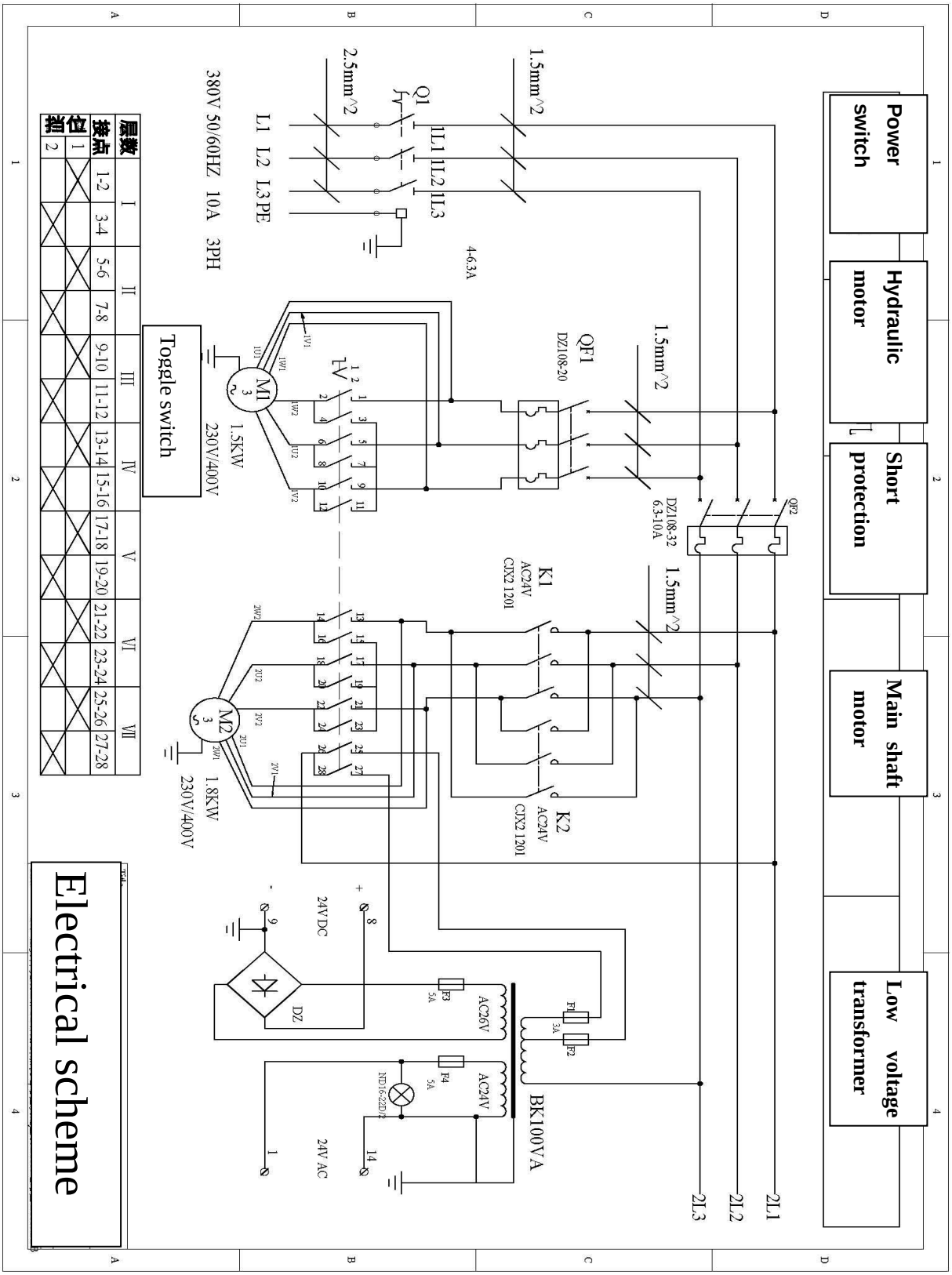

层数	I	II	III	IV	V	VI	VII
接点位置 1	1-2	3-4	5-6	7-8	9-10	11-12	13-14
接点位置 2							
	15-16	17-18	19-20	21-22	23-24	25-26	27-28

IT IS ABSOLUTELY FORBIDDEN TO INFLATE THE TIRE ON THE TIRE CHANGER